DG

DG10B, DG25B

High accuracy, rugged gauges.
Suitable for installation on machines.

- Excellent resistance to workshop conditions (BP/BS : IP64). Resistant to oil, water, dust, vibrations, and shocks.
- Accuracy : 2 µm ● Resolution : 0.5 µm
- Measuring range : 10 mm / 0.39" and 25 mm / 0.98"
- High measuring force (BP/BS)
- Low measuring force (BN/BL) ● Easy installation
- A variety of accessories available (See "Accessories for Gauges")

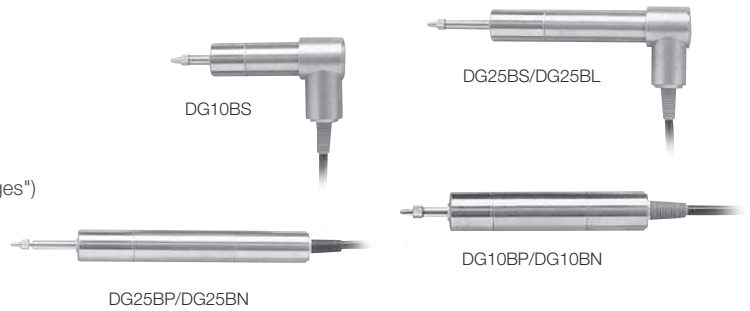

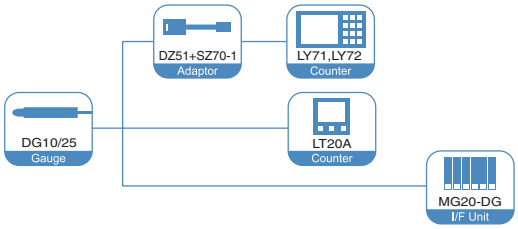

Digital Gauge

Dimensions

DG10BS

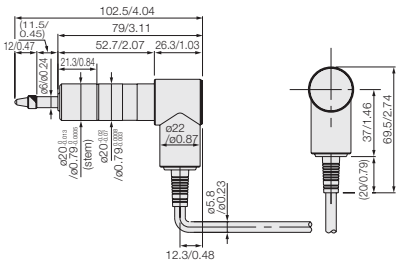

DG25BS/BL

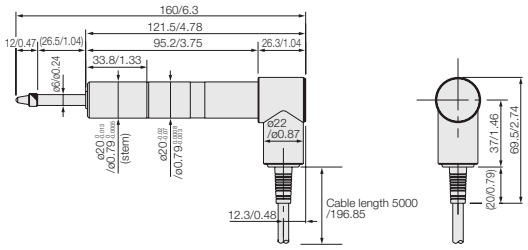

DG10BN/BP

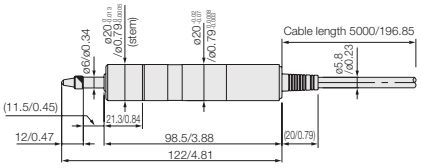

DG25BN/BP

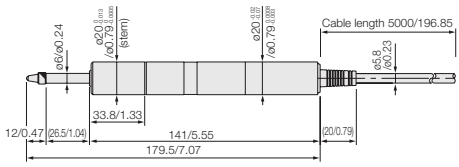

Unit : mm/inch

Specifications

Model		DG10BP BPM / BPE	DG10BS BSM / BSE	DG10BN BNM / BNE	DG25BP BPM / BPE	DG25BS BSM/BSE	DG25BN BNM/BNE	DG25BL BLM/BLE
Type		For Counter, A/B quadrature signal output type (See Page 26)						
Measuring range		10 mm / 0.39"			25 mm/ 0.98"			
Resolution		0.5 µm						
Measuring range force	Upward	All direction: 4.9 N or less		0.3 ± 0.25 N	All direction: 4.9 N or less		0.4 ± 0.3 N	
	Lateral			0.6 ± 0.3 N			0.7 ± 0.35 N	
	Downward			0.8 ± 0.35 N			1 ± 0.4 N	
Accuracy (at 20˚C / 68˚F)		2 µm						
Maximum Response speed		1m/s						
Operating temperature		0 ˚C to 50 ˚C / 32 ˚F to 122 ˚F (gauge)						
Storage temperature		-20 ˚C to 60 ˚C / -4 ˚F to 140 ˚F						
Cable length		$^{0}_{-0.013}$ 5 m/ 16.4' $^{0}_{-0.005}$"						
Mounting stem diameter		ø 20 mm/ ø 0.79"						
Feeler		Feeler ø 2.5 mm carbide ball with M2.5p x 0.45 screw on fitting end (DZ-122)						
Protective design grade		Equivalent to IP64		—	Equivalent to IP64		—	
Sealing (oil, water, dust)		Oil sealing, O-rings, Y-gaskets		—	Oil sealing, O-rings, Y-gaskets		—	
Mass*1		Approx.230 g/ 0.507 lbs			Approx.300 g/ 0.661 lbs			
Lift lever		—		DZ-161 (option)	—		DZ-161 (option)	
Air lifter		DZ174-010 (option)*2			DZ174-025 (option)*2			

*1 excl. cable unit and Interpolator unit.
*2 Tubing for compressed air device can be attached.