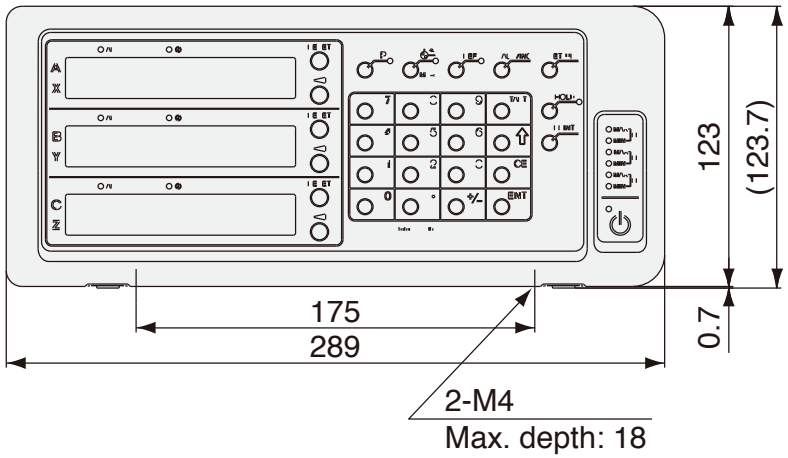
123
(123.7)
0.7
175
289
2-M4
Max. depth: 18

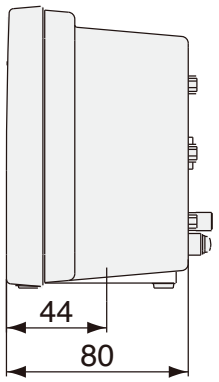
44
80

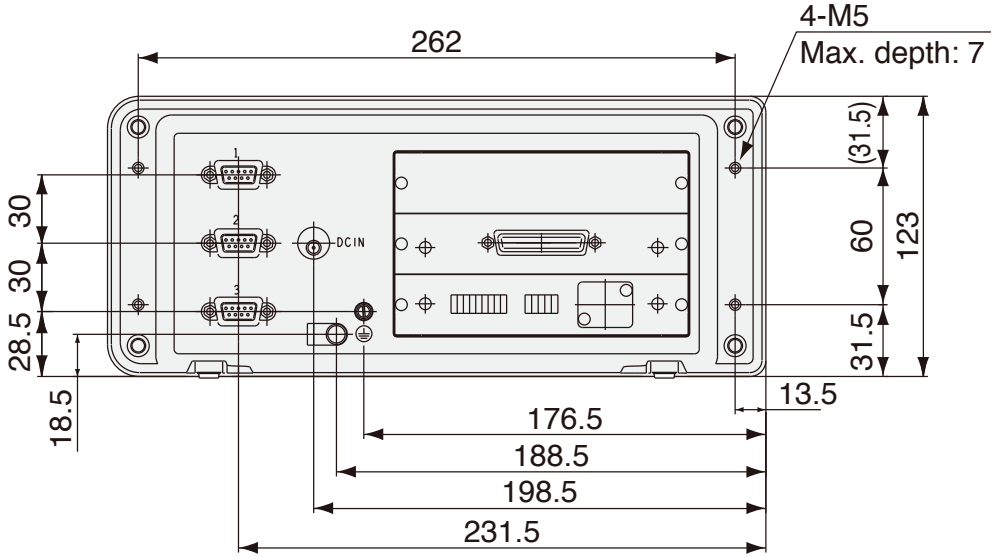
4-M5
Max. depth: 7
262
(31.5)
60
123
31.5
30
30
28.5
18.5
13.5
176.5
188.5
198.5
231.5
DCIN

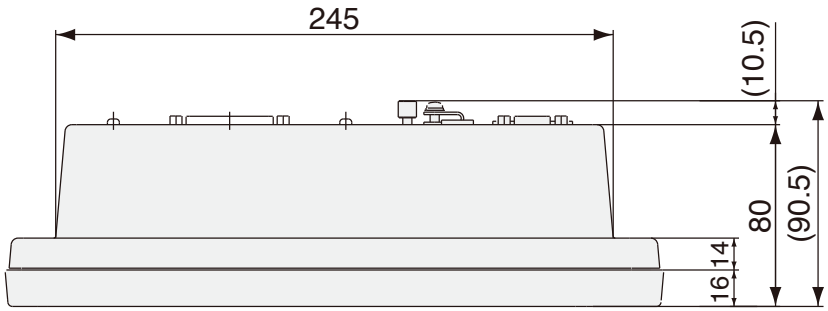
245
(10.5)
80
(90.5)
14
16

Unit: mm